instavac® II

TABLE TOP ASPIRATOR

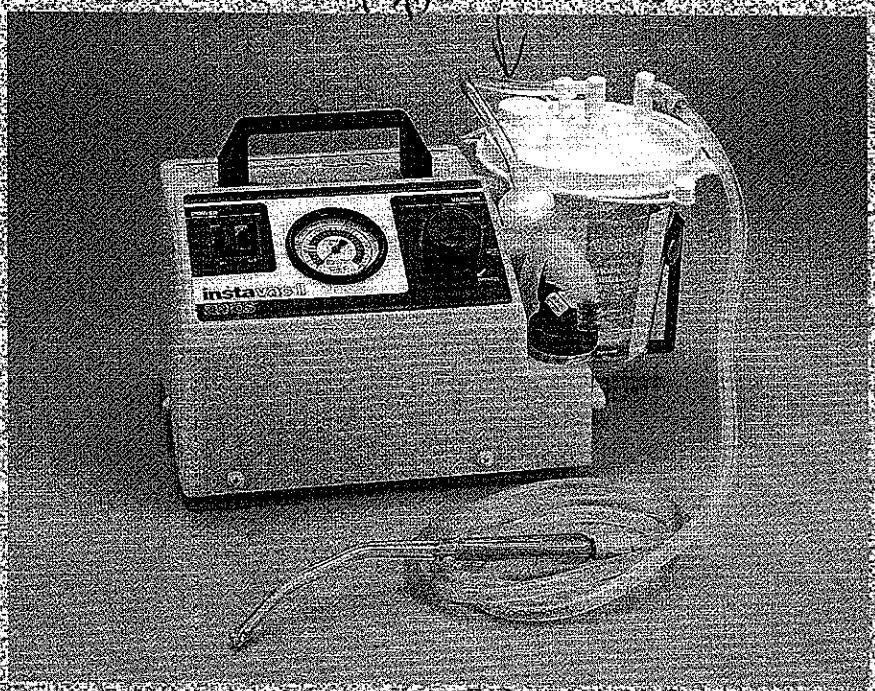

OPERATOR/MAINTENANCE

M A N U A L

aeros®

INSTRUMENTS, INC.

The purpose of the Instavac® II is to perform tracheal aspiration, oral aspiration, and scoping procedures. It is for use in the gastroenterology lab, on crash carts, and for back up in the operating room.

The Aeros Instavac II is an aspirator designed for hospital and physician use. It is driven by a fan cooled, rotary carbon vane pump and comes equipped with a disposable exhaust filter, an in line filter with 8" of tubing, and a disposable 1200cc collection canister.

This manual covers the Instavac II in the following sections:

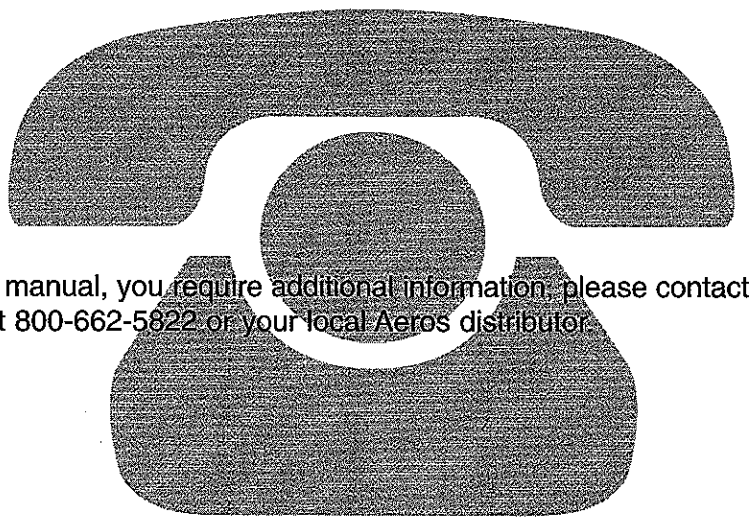

If, after reading this manual, you require additional information, please contact Aeros Instruments sales department at 800-662-5822 or your local Aeros distributor.

1. INSTRUCTIONS FOR USE

IMPORTANT: This device is for use only by persons properly trained in medical suction techniques and in the operations of suction equipment. Improper use could cause injury. Thoroughly read this operations manual to familiarize yourself with the Instavac® II before using this device.

DANGER: POSSIBLE EXPLOSION HAZARD IF USED IN THE PRESENCE OF FLAMMABLE ANESTHETICS.

PRIOR TO INITIAL USE

Upon receiving your new Instavac II, perform the following initial tests to ensure that your unit is in good working order and that no damage has occurred during shipment.

1. Visually inspect all components for physical damage that may have occurred during shipment.

2. Plug the power cord into a 120V AC wall outlet. Depress the "POWER" switch and listen to verify that the pump starts (also look to see that the red light in the switch illuminates).

3. Occlude the vacuum on the Instavac by placing your finger over the patient port of the collection canister and adjust the vacuum level by turning the vacuum regulator knob. Verify that the vacuum gauge reflects a change in vacuum level while turning the regulator knob. Also verify that you feel vacuum at your finger tip.

4. Depress the "POWER" switch to turn machine **OFF.** Unplug the power cord.

5. The bottle bracket is adjustable to accept any collection device up to 6" in diameter. If using a different sized canister than the one provided, you can adjust the bottle bracket by placing the Instavac II on its side and locating the Phillips head screw which holds the bracket. Loosen, DO NOT REMOVE, the screw and adjust the bracket to fit the collection device you will be using. Re-tighten the screw.

As mentioned above, the Instavac II will use any collection device. However, if you are not using the Aeros 1200cc disposable collection canister, **make sure that the collection device that is being used is equipped with a safety overflow mechanism to protect the pump from accidental overflow.**

Ensure that you have the appropriate collection device, suction tubing and aspirating tip for patient use. The Instavac II is now ready to be placed in service.

OPERATING INSTRUCTIONS

1. Verify that a clean bacteriostatic exhaust filter, in line suction filter, collection canister, and all the necessary tubing are installed on the Instavac, II.

2. Ensure that tubing is connected from the canister port of the overflow jar to the vacuum port of the collection canister and from the patient port of the collection canister to the aspirating tip that will be used.

3. Turn the unit **ON**.

4. Pinch the patient tubing closed. Using the "VACUUM REGULATOR" knob, adjust the vacuum level to the least amount of vacuum that is necessary to properly suction the patient.

5. Release the pinched tubing and suction the patient as needed.

REPROCESSING AND CLEANING INSTRUCTIONS

1. Discard all contaminated parts after any suctioning procedure. These components may include the collection canister, in-line filter, exhaust filter, all suction tubing, and the aspirating tip.

2. Wipe the surface of the unit clean with mild antiseptic and a clean soft cloth.

3. Place a new collection canister and the necessary suction tubing, filters if used, and aspirating tip with the Instavac II.

4. Check the air inlet filter at the back of the unit to see that it is clear of any dirt. If cleaning is necessary simply "pop off" the filter cover so the filter can be vacuumed or, if the dirt is excessive, washed in a mild antiseptic and thoroughly rinsed in water. After the filter is completely dried, reinstall the filter and snap the cover back into place.

5. Inspect the overflow trap assembly for any evidence of an overflow accident. If an overflow has occurred, use the following guidelines:

   OVERFLOW - Aspirant has contaminated the overflow trap assembly. Replace and/or clean parts according to procedure described in "OVERFLOW CLEANING PROCEDURE" on page 4.

   SEVERE OVERFLOW - Aspirant has contaminated the overflow trap assembly and the vacuum port tubing. Replace and/or clean external parts according to procedure described in "OVERFLOW CLEANING PROCEDURE" on page 4. In addition, open the unit (by removing the seven (7) Phillips head screws on the front, back, and left side) to assess the extent of the internal overflow.

OVERFLOW CLEANING PROCEDURE

NOTE: THESE PROCEDURES ARE ONLY REQUIRED WHEN AN OVERFLOW HAS OCCURRED.

1. Discard all external contaminated tubing.

2. Clean the overflow trap assembly by unscrewing the cap and disassembling the various components. Wash all parts with a mild antiseptic. Reassemble making sure that the open end of the float is facing down and that the cap seals tightly on the glass jar. (If you wish to discard the float & cage assembly, an overflow reprocessing kit is available.)

3. Replace all discarded tubing.

4. If the vacuum port tubing was contaminated & replaced, remove the shroud and inspect the following parts for contamination:

   All Internal Tubing - If contaminated, replace.
   Check Valve - If contaminated, replace.
   Regulator Assembly - If contaminated, clean according to procedure on page 6.

5. If contamination appears at the muffler exhaust assembly (Pg.12 Item 20), reprocess contaminated parts as follows:

   All Internal Tubing - If contaminated, replace.
   Check Valve - If contaminated, replace.
   Regulator Assembly - If contaminated, clean according to procedure on page 6.
   Pump Assembly - If contaminated, clean according to procedure on page 5.

2. MAINTENANCE

Tools required to service the Instavac, II.

(1) 6" pliers
(1) 11/32" nut driver
(1) 5/64" Allen wrench
(1) flat blade screwdriver
(1) Phillips screwdriver

CAUTION: NEVER DISASSEMBLE THE INSTAVAC II WHEN THE POWER CORD IS CONNECTED TO AN ELECTRICAL OUTLET.

To access the internal components of the Instavac II, remove the seven (7) Phillips head screws located on the front, back, and left side of the unit.

PREVENTATIVE MAINTENANCE

Preventative maintenance is recommended every six months. It is up to the user's discretion to clean the unit more often after frequent use or to lengthen the schedule if use is infrequent.

A Preventative Maintenance Kit is available which contains all necessary items and instructions for performing the preventative maintenance procedure.

PUMP REPLACEMENT

1. Disconnect the three (3) pump wires from the printed circuit board (PCB).

2. Disconnect the tubing.

3. Remove the mounting bracket for the capacitor, then the capacitor.

4. Tilt the chassis to one side. Using an 11/32" nut driver, remove the nuts from the underside of the Instavac,II that lock the vibration pads to the chassis. Remove pump.

5. To mount replacement pump, insert the four (4) screws on the vibration pads into the mounting holes. Secure the nuts from beneath the chassis.

6. Connect the pump wires to the PCB. Replace the capacitor under its mounting bracket.

7. Reconnect all tubing.

8. Proceed to "PERFORMANCE TEST AND ADJUSTMENTS" on page 7.

PUMP CLEANING

CAUTION: POSSIBLE EXPLOSION HAZARD IF USED IN THE PRESENCE OF FLAMMABLE ANESTHETICS. IF FLAMMABLE CLEANING SOLUTIONS ARE USED FOR CLEANING, AIR DRY COMPLETELY BEFORE YOU REASSEMBLE AND RUN THE UNIT.

NOTE: The heart of the Instavac II is a rotary carbon vane pump. It is **NOT** recommended that the pump be disassembled for routine cleaning. However if performance has been effected by the pump becoming contaminated with aspirant or if an overflow problem has occurred, the following procedure should be performed:

1. Remove the pump assembly from the Instavac II as described above in the "PUMP REPLACEMENT" section.

2. Remove the three (3) pump head screws located on the pump head.

3. Remove the cover plate, shim, wear plate and the four (4) vanes. Note the direction of the vanes as they should be reinstalled the same way as they came out.

4. Wash all exposed areas with an isopropyl alcohol solution.

Before you reassemble the pump make certain that all components are completely dry. Rust is likely to form if any moisture is present.

5. Replace the vanes, wear plate, shim, and cover plate.

6. Replace and equally tighten the three (3) pump head screws.

7. Reinstall the pump assembly.

VACUUM REGULATOR REPLACEMENT

1. Remove the shroud from chassis (make note of the orientation of all tubing and the regulator body).

2. Disconnect all three (3) tubing connections from the regulator body.

3. Use a 5/64" Allen wrench to loosen the set screw on the shaft of the regulator body. Unscrew and remove the knob from the control panel.

4. From the inside of the shroud remove the locknut that secures the regulator to the shroud.

5. Remove the check valve located at the bottom of the regulator and mount the checkvalve to the new regulator body. **Please note:** Upon reinstallation, make sure that the arrow on the body of the valve points away from the regulator. Improper replacement will cut off vacuum at the outlet.

6. To mount the new regulator to the Instavac, II, first remove the knob from the body by loosening the set screw on the shaft of the body. (Use a 5/64" Allen wrench.)

7. Mount the new regulator body in the same orientation as the original to the shroud with the locknuts.

8. Insert the regulator knob into body.

9. Tighten the set screw until it stops. Then loosen the set screw 1/4 turn to prevent damage to the shaft of the knob.

10. Reconnect all tubing.

VACUUM REGULATOR CLEANING

1. Remove the vacuum regulator assembly as described in the "VACUUM REGULATOR REPLACEMENT" section above.

2. Discard all tubing.

3. Remove the O-rings from the knob. Also note that the inner rod of the knob can be pulled out for cleaning.

4. Clean the body, fittings and O-rings in a mild soap solution or isopropyl alcohol and dry all parts completely. Clean only the shaft and the removable inner rod on the regulator knob. Do not allow any water into the knob as it will impede its performance.

5. Reassemble all components and apply a light coating of a silicone based lubricant (i.e.: Dow Corning 111) to the O-rings.

6. Reassemble the vacuum regulator and remount the regulator in the Instavac, II.

7. Attach new vacuum tubing.

3. PERFORMANCE TEST AND ADJUSTMENTS

It is recommended that you verify performance of the Instavac II after:

- an overflow.
- preventative maintenance.
- any maintenance.

To verify performance:

1. Plug the power cord into a 120VAC electrical outlet. Turn the unit **ON** and listen to verify the pump starts.
2. Occlude the vacuum on the Instavac II by placing your finger over the patient port of the collection canister and adjust the vacuum level by turning the VACUUM REGULATOR KNOB. Verify that the vacuum gauge reflects a change in vacuum level while turning the regulator knob. Also verify that you feel vacuum at your finger tip.
3. Turn the unit **OFF.**

The following steps will verify the flow and the vacuum specifications:

1. Connect the Aeros Vac-U-Test® or any other flow measuring device to the vacuum outlet of the Instavac II.
2. Turn the unit **ON.**
3. Adjust the Instavac II to full vacuum and verify both the flow and vacuum specifications found on page 9 of this manual.

TROUBLESHOOTING

PROBLEM	CAUSE	CORRECTION
Low or no vacuum at outlet.	1. Regulator is turned all the way off. 2. An improper tubing connection or crimped tube in the system. 3. Mechanical shut-off is activated in either the overflow trap assembly or the collection canister. 4. Collection canister improperly installed or defective. 5. Check valve reinstalled in wrong direction.	1. Turn regulator knob clockwise to start flow or to increase vacuum. 2. Verify that all tubing is properly connected. 3. If mechanical shut-off has been activated on a full canister, replace the canister. If the overflow trap assembly has been activated in the safety overflow jar, follow Overflow Cleaning Procedures on page 4. 4. Check canister for any cracks. Verify that all ports on the canister lid are tight. 5. Arrow on check valve should point away from regulator.
Pump does not turn on when power switch is depressed.	1. Unit is not plugged in. 2. Faulty electrical connections. 3. Pump has seized. 4. Blown fuse(s).	1. Plug the unit into a 120VAC outlet. 2. Make sure that all wires are secured tightly on the lugs and the lugs themselves are secured on the terminals. 3. Clean pump according to Pump Cleaning on page 5. Another cause for pump failure is age. The motor may be worn and cannot deliver the torque required to operate the pump, or the bearing is damaged and is locking the rotor in place. Replace the pump. 4. Replace the fuse(s).
Gauge does not	1. System is open to atmosphere. register vacuum level. 2. Gauge is either not connected or is faulty. 3. Gauge tubing orifice is blocked.	1. Occlude the system (pinch vacuum tubing closed). 2. Check that tubing is properly connected between vacuum regulator and gauge. 3. Clean tubing and insure hole in orifice is clear.

DEVICE SPECIFICATIONS

PUMP

Rotary carbon vane type.

PERFORMANCE

Vacuum Range:	0-550mm Hg
Free Air Flow:	38 LPM minimum

CONTROLS

Vacuum Regulator:	Rotary type on panel.
Vacuum Gauge:	Calibrated in mm Hg

ELECTRICAL REQUIREMENTS

AC:	120V, 60 Hz, 1.5 Amps 220V, 50 Hz, (special order)

COLLECTION DEVICE

Canister:	Disposable plastic with mechanical shutoff.
Capacity:	1200cc standard.
Tubing:	8", with bacterial filter.

PHYSICAL DIMENSIONS

Overall Height:	8"
Overall Width:	12"
Overall Depth:	9.5"
Weight:	16 lbs.

UL 544U Listed
CSA 22.2 No. 125 Certified

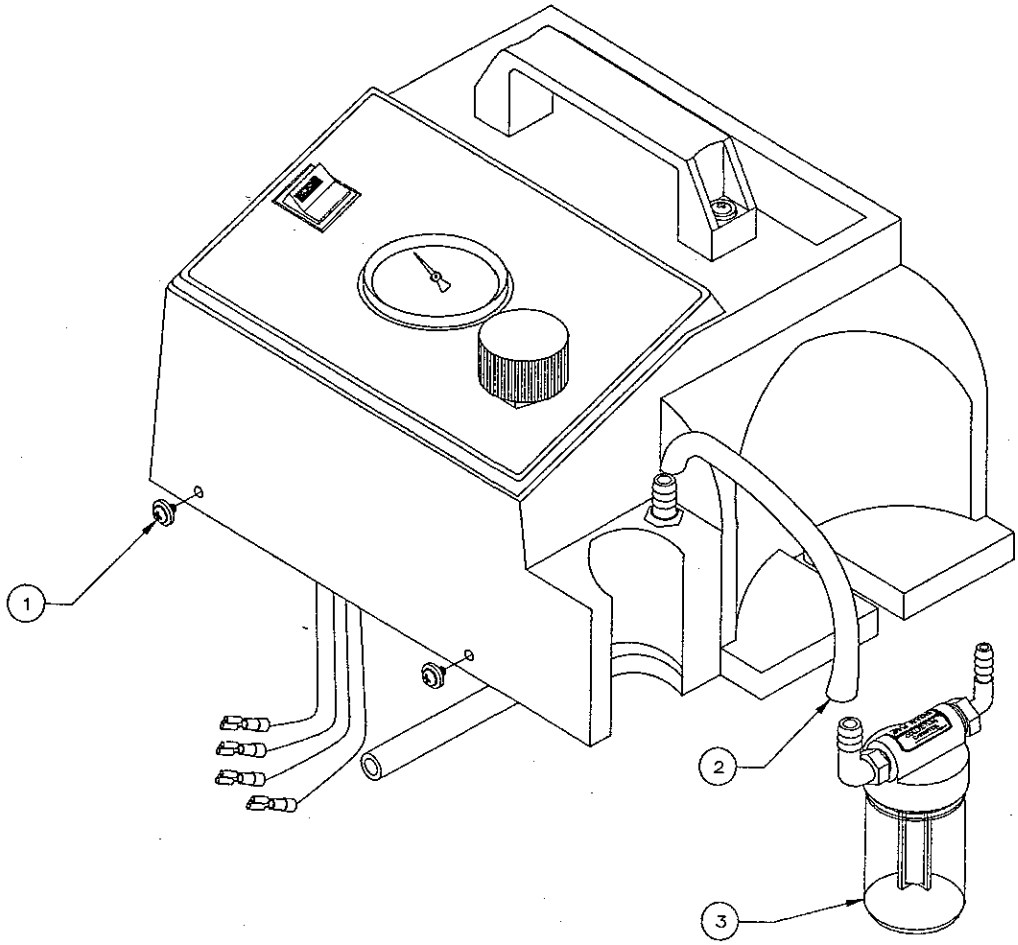
1
2
3

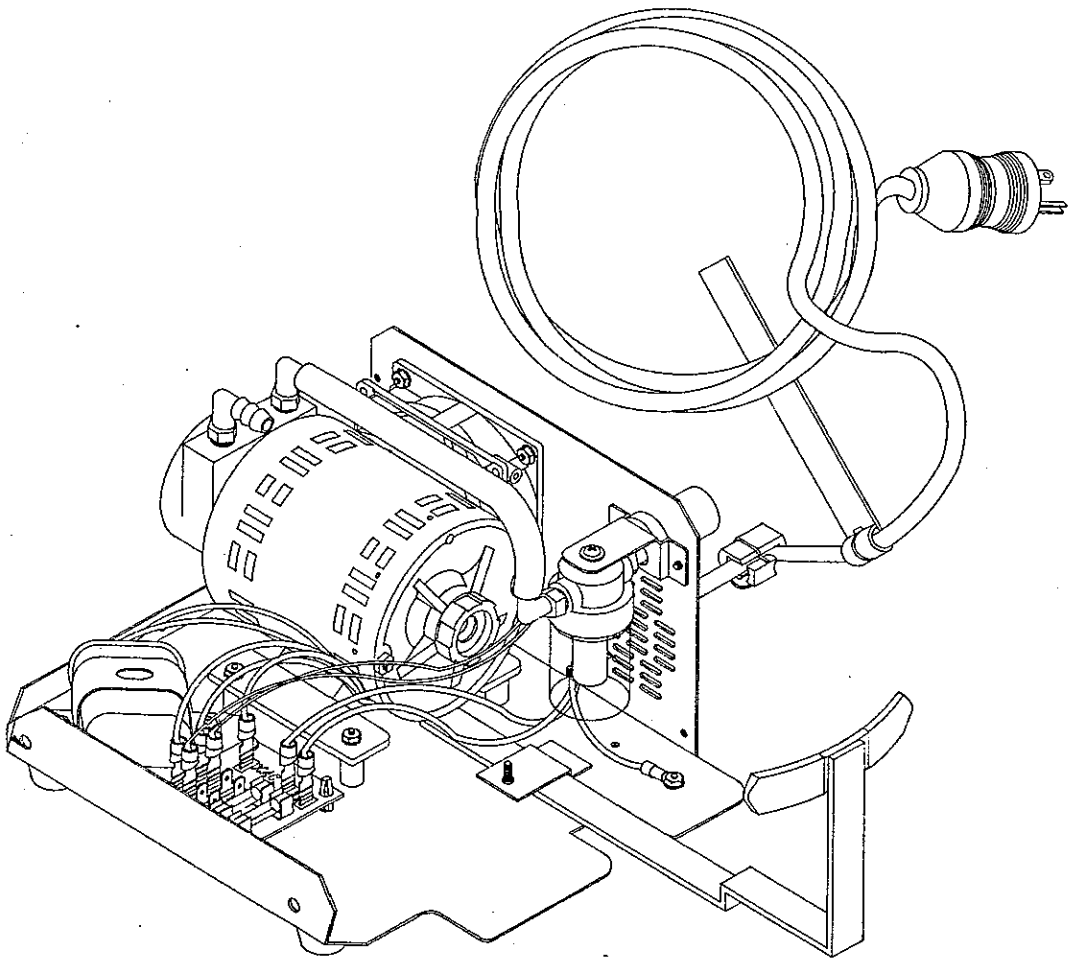

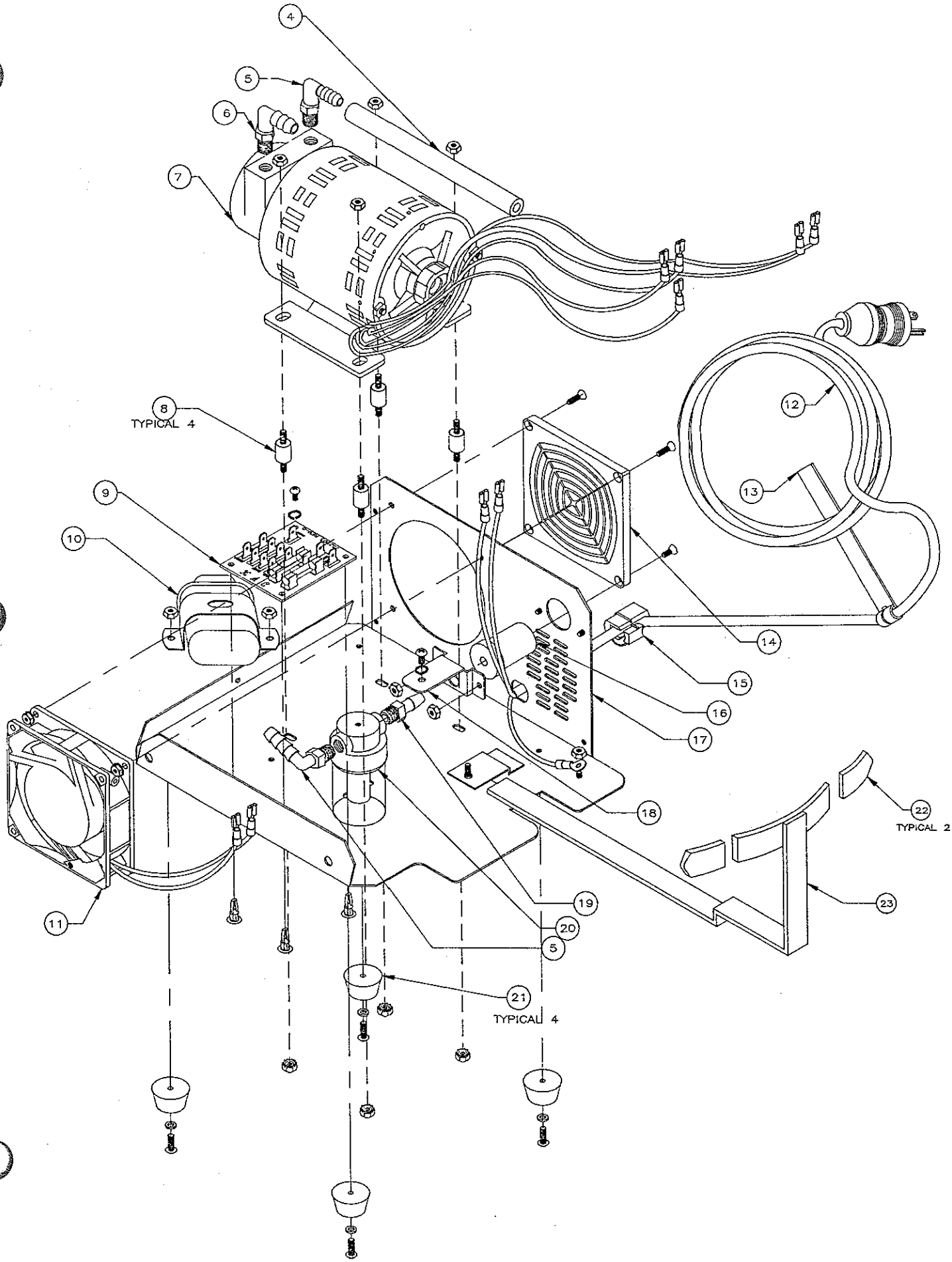
4
5
6
7
8
TYPICAL 4
9
10
11
12
13
14
15
16
17
18
19
20
5
21
TYPICAL 4
22
TYPICAL 2
23

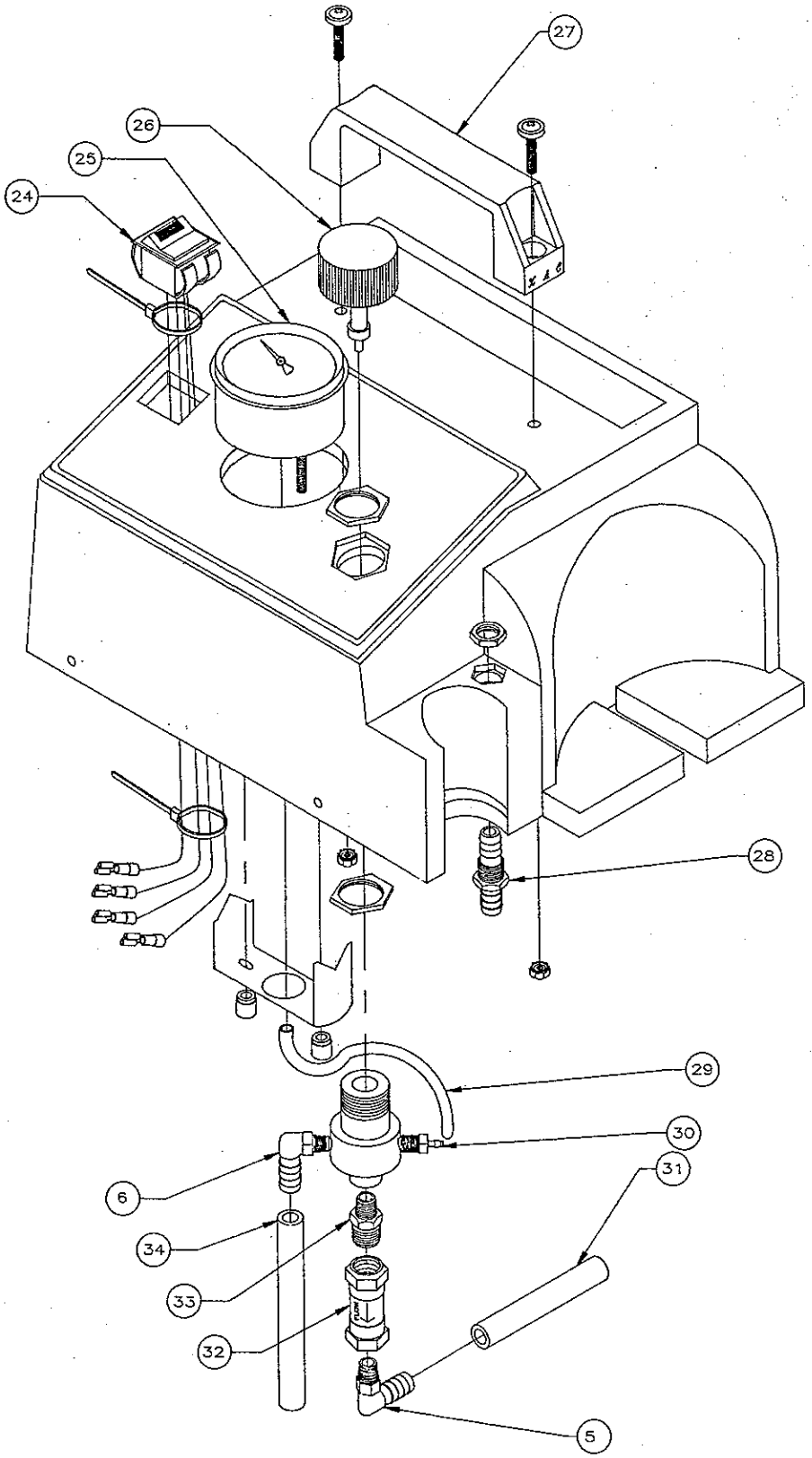
27
26
25
24
28
29
30
31
6
34
33
32
5

ITEM	QTY	PART NO.	DESCRIPTION
1	7	701005	SCREW 8-32X5/8 PH HD W/ WASHER
2	6.5"	5100162	TUBING, SILASTIC 5/16" ID
3	1	752100	OVERFLOW TRAP ASSEMBLY
4	6	5100162	TUBING, SILASTIC 5/16" ID
5	1	703003	FITTING, ELBOW 3/8BARB X 1/8NPT, WHITE
6	1	703002	FITTING, ELBOW 3/8BARB X 1/8NPT, BLACK
7	1	752250	PUMP KIT, INSTAVAC II
8	4	5566	VIBRATION BUMPER
9	1	752203	BOARD, CONTROL
10	1	756370	CAPACITOR KIT
11	1	752260	FAN KIT, INSTAVAC II
12	1	752270	POWER CORD KIT, INSTAVAC II
13	1	5100126	STRAP, VELCRO
14	1	756303	FILTER ASSEMBLY, INLET
15	1	5584006	RT ANGLE STRAIN RELIEF, INSTAVAC
16	1	5581	MOUNT, DISPOSABLE FILTER
17	1	752201	CHASSIS
18	1	752202	BRACKET, EXHAUST MOUNT
19	1	703001	FITTING, BARB 1/8 NPT X 1/4 ID
20	2	5526-01	EXHAUST BOTTLE, VAC PUMP
21	4	5100014	FEET, MOUNTING
22	2	5717	COVER, BOTTLE BRACKET
23	1	5100171	BRACKET, BOTTLE
24	1	756204	SWITCH ASSEMBLY, POWER
25	1	752302	GAUGE, VACUUM 1-500 MMHG
26	1	752360	REGULATOR KIT, INSTAVAC II
27	1	2534	HANDLE
28	1	756302	CONNECTOR, PANEL FOR 3/8" TUBING
29	7	8023	SILASTIC TUBING 1/8 ID, 1/4 OD
30	1	5591	CONN 1/8 NPT X 1/8 BARB
31	6.5"	5100162	TUBING, SILASTIC 5/16" ID
32	1	5765001	REVERSE FLOW CHECK VALVE
33	1	703006	FITTING, 1/8 NPT X 1/4 NPT NIPPLE
34	9.5"	5100162	TUBING, SILASTIC 5/16" ID

REPLACEMENT KITS	PARTS INCLUDED
752302 GAUGE, VACUUM 0-500 MMHG	GAUGE
	MOUNTING BRACKET
	NUTS FOR MOUNTING
752360 REGULATOR KIT	MOUNTING NUTS
	REGULATOR
	FITTING, 1/8 NPT X 1/4 NPT NIPPLE
	FITTING, ELBOW 3/8 BARB X 1/8 NPT BLACK
	CONN 1/8 NPT X 1/8 BARB
756370 CAPACITOR KIT	CAPACITOR 5 MFD
	CAPACITOR TERMINAL COVER BOOT
	MOUNTING STRAP D
756360 VACUUM PUMP REPLACEMENT KIT	CAPACITOR KIT
	VACUUM PUMP
	FITTING, ELBOW 3/8 BARB X 1/8 NPT WHITE
	FITTING, ELBOW 3/8 BARB X 1/8 NPT BLACK

aeros®

Aeros Instruments, Inc.

1111 Lakeside Drive • Gurnee, IL 60031
1-800-662-5822/708-855-0800

PRINTED IN U.S.A.

350104 11/94